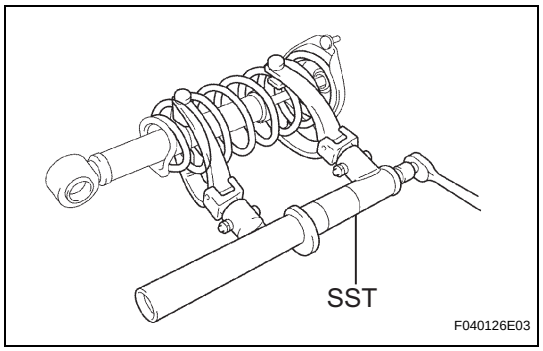

8. REMOVE SHOCK ABSORBER ASSEMBLY REAR LH

(a) Using SST, compress the coil spring rear LH.
SST 09727-30021
NOTICE:
Do not use an impact wrench. It will damage the SST.

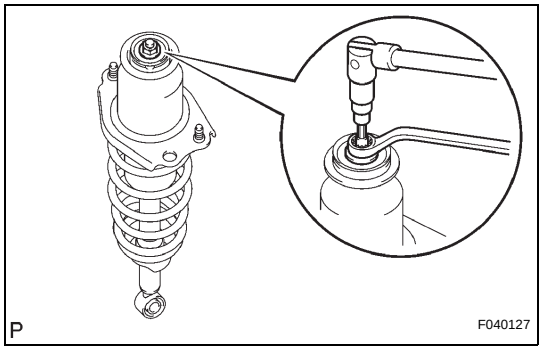

(b) Use a 6 mm hexagon wrench to hold the piston rod and remove the nut.

(c) Remove the rear shock absorber cushion washer No. 1, rear suspension support, rear spring front bracket sub- assembly LH, LH support assembly rear suspension, rear coil spring insulator upper LH, rear spring bumper No. 1 LH and coil spring rear LH.

INSPECTION

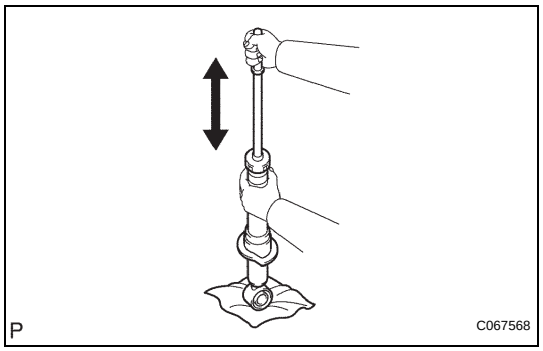

1. REMOVE SHOCK ABSORBER ASSEMBLY REAR LH

(a) Compress and extend the shock absorber rod and check for abnormal resistance or unusual sound during the operation.
If an abnormality is found, replace the shock absorber assembly rear LH with a new one.
NOTICE:
When disposing of the shock absorber assembly rear LH, see DISPOSAL (See page SP-39).

INSTALLATION

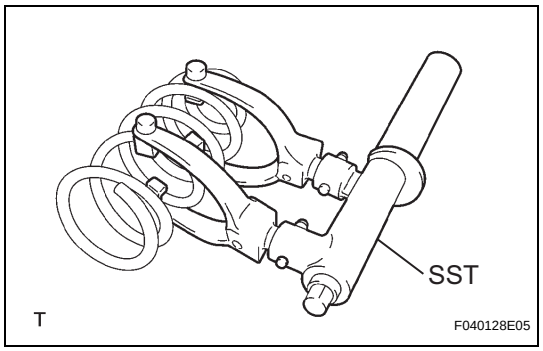

1. INSTALL SHOCK ABSORBER ASSEMBLY REAR LH

(a) Using SST, compress the coil spring rear LH.
SST 09727-30021
NOTICE:
Do not use an impact wrench. It will damage the SST.

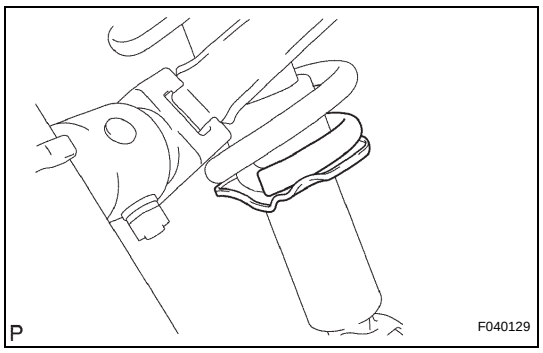

(b) Insert the coil spring rear LH into the shock absorber assembly rear LH.
NOTICE:
Fit the lower end of the coil spring rear LH into the gap of the spring lower seat.

(c) Install the rear spring bumper No. 1 LH and LH support assembly rear suspension.

(d) Set the rear coil spring insulator upper LH to the rear spring front bracket sub-assembly LH.

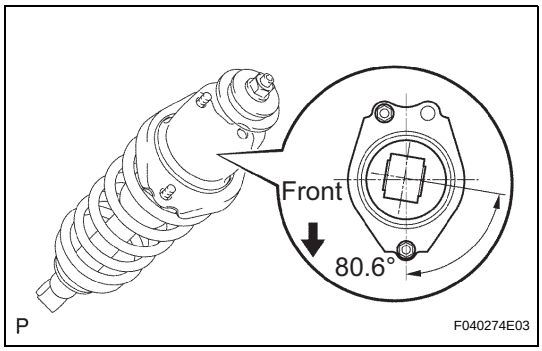

(e) Position the rear spring front bracket sub-assembly LH with rear coil spring insulator upper LH as shown in the illustration.
HINT:
Place the RH side on the symmetric position to the illustration.

(f) Install the rear suspension support and rear shock absorber cushion washer No. 1.

(g) Temporarily tighten a new center nut.

(h) Remove the SST.

(i) Recheck the direction of the rear spring front bracket sub-assembly LH.

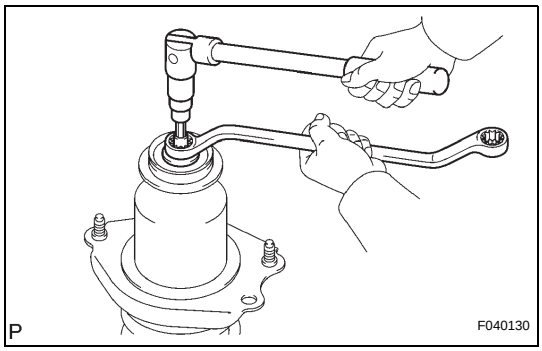

(j) Use a 6 mm hexagon wrench to hold the piston rod and tighten the nut.
Torque: 56 N*m (571 kgf*cm, 41 ft.*lbf)

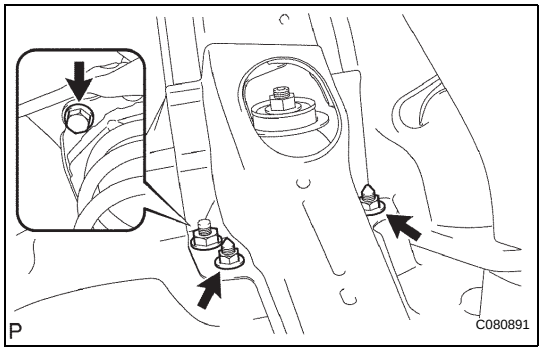

2. INSTALL REAR SHOCK ABSORBER WITH COIL SPRING

(a) Install the 2 nuts and bolt.
Torque: 80 N*m (816 kgf*cm, 59 ft.*lbf)

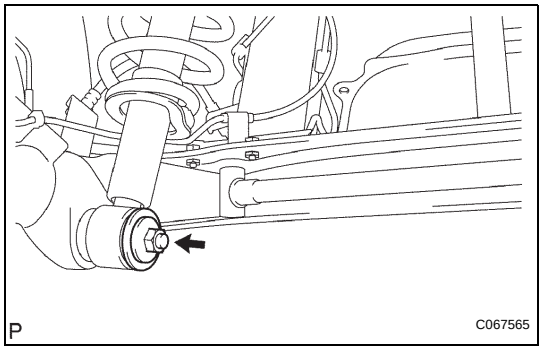

(b) Install the rear shock absorber with coil spring, temporarily tighten the nut and rear shock absorber LH cushion retainer.

3. INSTALL LUGGAGE COMPARTMENT TRAY (See page IR-12)

4. INSTALL DECK BOARD SUB-ASSEMBLY (See page IR-13)

5. INSTALL DECK BOARD NO. 2

6. INSTALL DECK FLOOR BOX REAR (See page IR-13)

7. INSTALL SHOCK ABSORBER HEAD COVER

8. STABILIZE SUSPENSION

(a) Install the rear wheel and jack down the vehicle.
Torque: 103 N*m (1,050 kgf*cm, 76 ft.*lbf)

(b) Bounce the vehicle up and down several times to stabilize the suspension.

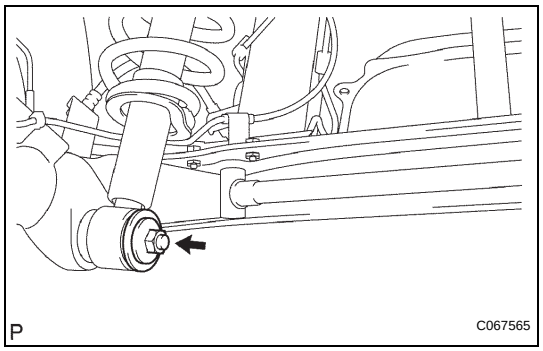

9. FULLY TIGHTEN REAR SHOCK ABSORBER WITH COIL SPRING

(a) Fully tighten the nut.
Torque: 80 N*m (816 kgf*cm, 59 ft.*lbf)

10. INSPECT REAR WHEEL ALIGNMENT

HINT:
See page SP-12